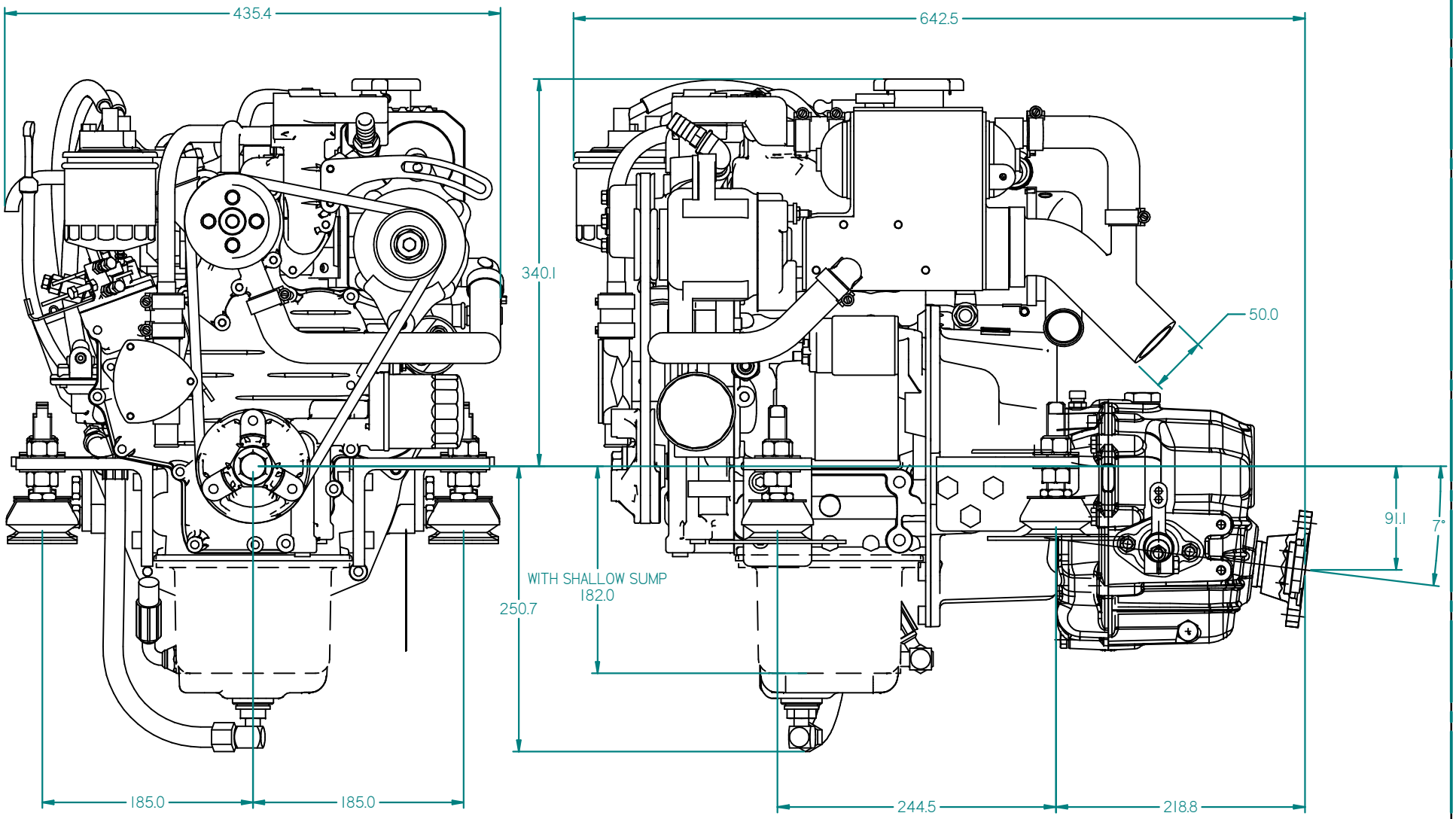

REV	DESCRIPTION	DATE	APP'D	DRAWN
01				

NOTES

TITLE:

BETA14 HEAT EXCHANGE TMC60A

DIMENSIONS IN MM (INCH)
DO NOT SCALE

PART FILE NAME: BETA14 HE TMC60A 100-09043.asm

BETA MARINE

TEL: (01452) 723492 FAX: (01452) 729916

BETA MARINE LTD,
DAVY WAY,
WATERWELLS,
QUEDGELEY,
GLOUCESTER. GL2 2AD, UK

DRAWN BY:	SIZE	DWG NO:	REV
TW	A4	100-09043	00
CHECKED BY: LT	SCALE NTS	PAGE 1 of 1	DATE 19/03/2014